SIPAPU AND PYRAMID TOO: THE TEMPLE OF THE CRYPT AT ALTA VISTA, CHALCHIHUITES

Ellen Abbott Kelley and J. Charles Kelley
Sul Ross State University, Alpine, Texas

ABSTRACT

The Temple of the Crypt at Alta Vista was originally a free-standing tomb of a high status individual. Later, coinciding with the burial of a second high status individual, it was incorporated into the basal platform of a two-story temple built around and over it. Subsequently, the crypt was opened and a third high status individual was buried therein. The temple itself was an elevated rectangular room entered from the Southwest Court by an exterior stairway. The basement room containing the crypt must have been reached through a hatchway in the temple floor. The analogy to an above-ground rectangular kiva with a sipapu in the floor used as a god-entry is obvious. Later, superimposed constructions slowly converted the structure into a taluded Mesoamerican pyramid, topped by its own temple. This development suggests that some southwestern kiva-sipapu complexes are analagous to some Mesoamerican pyramid-tomb complexes and that both complexes have a common Mesoamerican origin.

INTRODUCTION

In a paper, "Sipapu and Plaza Too," delivered at the Reno, Nevada meeting of the Society for American Archaeology in 1966 (Kelley 1966 MS), J. Charles Kelley pointed out the occurrence of both plaza and kiva sipapus of the Southwestern Puebloan-Anasazi in ethnographic Huichol culture and archaeologically in sites of the Chalchihuites culture of Zacatecas and Durango, Mexico.

In our 1975-76 excavations at Alta Vista, Chalchihuites (Figure 1), in western Zacatecas, Mexico (financed by the Southern Illinois University at Carbondale and by the National Science Foundation under Grant SOC74-03759 AO2 we discovered, beneath a later pyramid, an early rectangular stone masonry building (the Temple of the Crypt), containing a basement area in which there was a subterranean burial crypt where three high status individuals had been buried sequentially. This find yielded a new understanding of the meanings and origin of the sipapu/kiva complex and its relation to Mesoamerican beliefs and practices.

THE NUCLEAR CONSTRUCTION CORE OF ALTA VISTA

Alta Vista (a Mexican National Monument) is the principal ceremonial center of the Chalchihuites culture, located near the town of Chalchihuites in western Zacatecas (Kelley 1971, 1976; Kelley and Kelley 1966). It was built as a planned and surveyed center, hypothetically by outside trader/missionaries from western Mexico as an extension of the Teotihuacan commercial and religious empire (Kelley 1974, 1976, 1977; Kelley and Kelley 1978).

The center and oldest section of the Alta Vista site (Figure 2) consists of a Hall of Columns (measuring approximately 20 by 20 meters), built on a taluded stone masonry platform, and a large forecourt (approximately 27 by 28 meters), the Southwest Court, surrounded by a raised banquette or walkway, to which were attached various platforms and structures. The principal structures were oriented with their corners toward the cardinal directions, rather than their wall lines. Survey stakes had been placed marking wall alignments, doors, column locations, and other architectural features, prior to the construction of the Hall of Columns and related structures, demonstrating that the ceremonial center was built according to a preconceived plan. Midway of the northwestern side of the Southwest Court, a cluster of three related structures formed a three-temple complex consisting of a central taluded pyramid and associated temples on each side (Figure 3A). The pyramid, Structure No. 2B, was reached from the Southwest Court by a balustraded stirway and evidently had been built in several stages. Its exterior walls and the stairway were cleared of debris during our 1974 excavations and the subterranean room was discovered near the end of the field session.

A

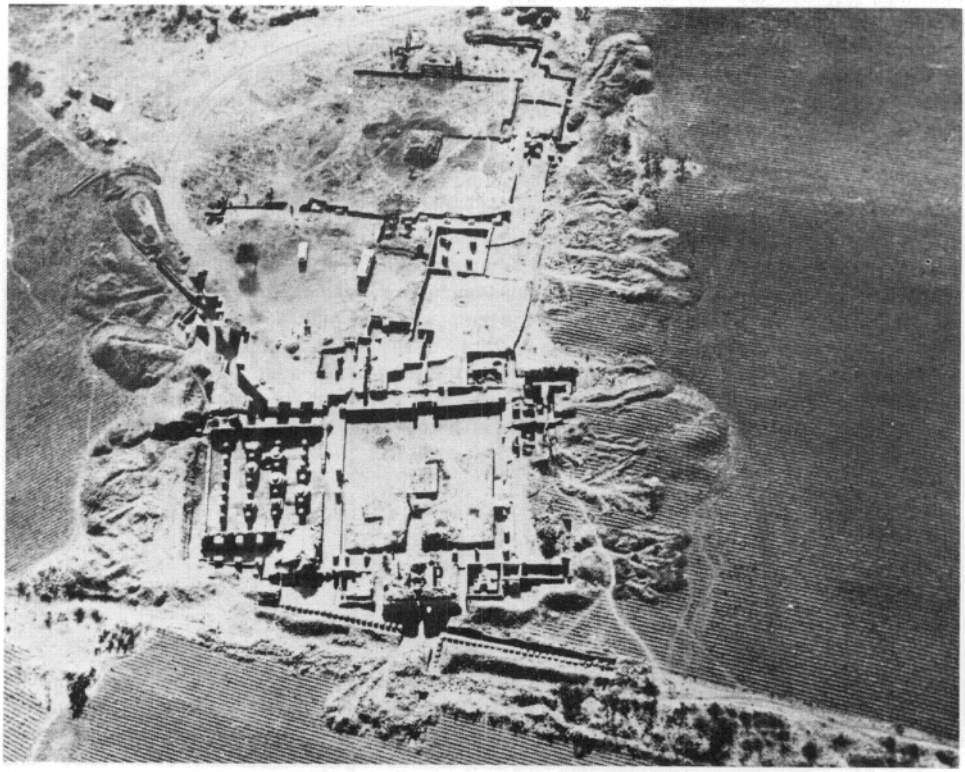

B.

EXCAVATIONS IN STRUCTURES NO. 2B - THE SUN PYRAMID

In the last days of our 1975-76 season, excavation of the pyramid took place from above, exposing and largely clearing a subterranean room; through an erosional break on the northwest, exposing a cross-section of the pyramid construction and giving us access to the subterranean chamber; and from the southeast, where a trench along the exterior of the southwestern balustrade and stair demonstrated that the subterranean room was the interior of an early rectangular stone masonry room, the Temple of the Crypt, lying within and below the pyramid itself (Figure 4A). The latter trench also yielded much data regarding constructional stages. When the interior of the early structure was partially cleared, we discovered a covered burial crypt in its northwestern end (Figure 4B). There was evidence that the temple itself had been surveyed and constructed subsequent to the construction of the crypt, but because of insufficient available time, we were able to clear only the upper part of the exterior walls of the "sarcophagus"; hence we have no firm excavational data regarding its exterior appearance. This crypt appeared to have originally been a free-standing "sarcophagus" or coffin of adobe and stone, erected on a "use-floor" just northwest of the point where a stairway from the Southwest Court reached the midpoint of the banquette on that side. Later, we discovered that a screen of three free-standing figures had been built on the outer edge of the banquette there, to be incorporated later into the stairway of the Temple (Figure 4A). Although "sarcophagus' had clearly been built before the enclosing structure, the archaeological data gave us no indication of the length of the interval between the two constructional events.

The bathtub-like crypt had originally been left unfilled, except for its first burial, and had been covered with a roof of small poles laid side by side and covered with adobe. The bones of the first burial were somewhat scattered, perhaps representing a loosely-flexed inhumation, with the skull detached and placed on a fire-hardened adobe building block in the western corner (Figure 4D). The individual respresented may have been decapitated prior to burial, or his skull may have been detached and placed in the western corner at the time the second burial was made (Figure 4E). Subsequently, the "roof" of the crypt had been broken in and a second interment made, a secondary bundle burial of an adult male placed in an upright position, near the western corner, facing east. The crypt "roof" was rebuilt, using in part poles from the earlier roof, judging by the evidence of radiocarbon dates.

Thereafter, the crypt "roof" was breached again and a third interment (Figure 4E), again, a bundle burial, was made, practically sitting in the lap of the second burial. The crypt roof was replaced again, and as before, some poles from the earlier roofs may have been reused.

If the evidence of the radiocarbon dates, to be discussed later, is to be accepted at face value, it was the time of the second burial that the Temple of the Crypt, surrounding and enclosing the original "sarcophagus", was constructed, inasmuch as the radiocarbon dates for three of the survey stakes used in laying out the walls of the temple correspond to at least one, probably two, of the poles used in construction of the second "roof" of the "sarophagus."

Thereafter, probably as an accompaniment to the third burial, a later temple (the Crenelated Temple) was constructed. The earlier temple was torn down and its component adobe building blocks and wall-top merlons were used as fill for an extension of the basal platform which enclosed the underlying basement structure.

Figure 1. Aerial views of Alta Vista. A. View from southeast after end of 1974 excavations. B. View from northwest near the end of 1975-76 excavations. "P" marks pyramid, Structure No. 2B, in both views. (A. Photograph courtesy of Morrison Limon Boyce and C.E.T.E.N.A.L. B. Photograph courtesy of Drs. Alejandro Peschard, Jaime Bodat, and Jesus Lazalde)

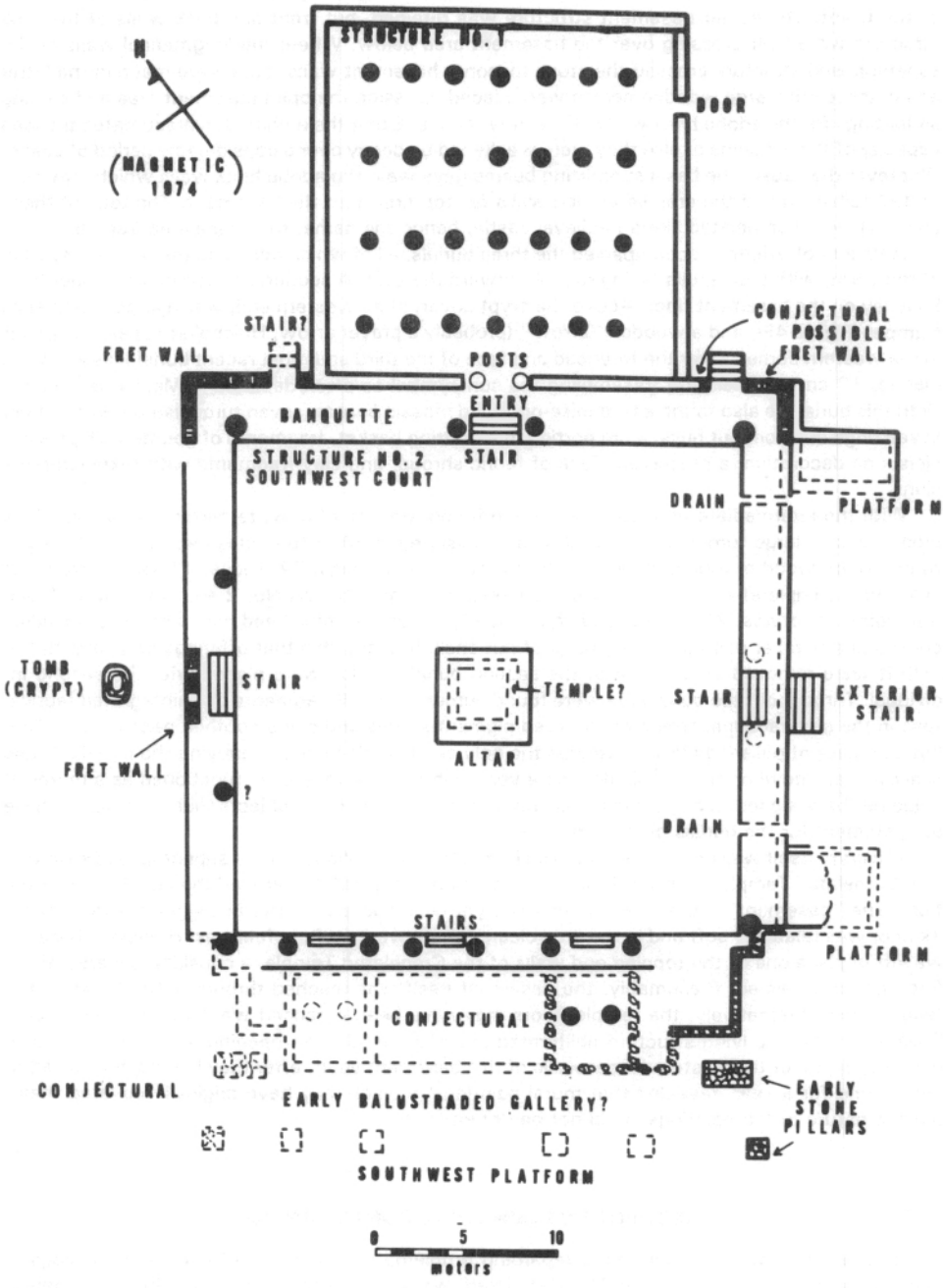

Figure 2. Plan of postulated nuclear section of Alta Vista, showing earliest construction.

The axis of the Crenelated Temple was constructed at right angles to that of the earlier Temple of the Crypt. The earlier basement structure was retained, but front and back walls of the new structure were built crossing over the basement area below. Where the longitudinal walls of the superimposed structure crossed the stone masonry basement walls, cuts were made in the latter and in these cuts large wooden beams were placed, crossing the open basement area and serving as footings for the adobe brick walls of the new temple. Either the architect overestimated the load capacity of these beams or else they were weakened by decay over a considerable period of usage. Whatever the cause, the basal supporting beams gave way, the adobe brick walls which they supported collapsed and the crenelated end walls fell top first, into the basement. The tops of these end walls were crenelated like a medieval castle, hence the name, the Crenelated Temple.

A variety of offerings accompanied the three burials, all of which occupied the western section of the crypt, with their skulls facing roughly toward the east. A section of a red obsidian sacrificial knife lay on the basement floor. Above the crypt cover, at its western end, was a large conch shell trumpet (Figure 4F), and a wooden "arrow" (probably a prayer arrow, Huichol-style) stood upright in the western corner. Over the forehead and face of the third and most recent burial was a mosaic plaque, 10 cms. in diameter, resembling the sun symbol as often depicted in Mesoamerican art, With this burial we also found a turquoise-on-wood mosaic *bezote,* seven turquoise-on-wood rings, seven rings cut from nut hulls, a rim portion of a matting basket, fragments of gourds with pseudo-cloisonne decoration, a preserved piece of fabric shroud, and clay fragments with textile impressions.

With the intermediate or second burial, we found remains of a pyrite mirror with a two-piece stone back, a large turquoise-on-wood mosaic (disintegrated), a turquoise necklace, a "turkey" turquoise-on-wood mosaic pendant, 21 turquoise-on-wood rings, 72 pieces of rings cut from nut hulls (four complete) and a cache of chert flakes. With both burials No. 2 and No. 3 were found fragments of *petates.* With the original burial we found only a small bead ring, a cache of obsidian chips and a number of fragmentary rings of nut shell. It is possible that offerings originally placed with it were removed at the time of the second burial, or else were placed with the second individual. Throughout the burial area were found numerous small fragments of disintegrated fabrics. Also in the general burial area were four red pigment stones and one smoothed pebble. A shallow bowl or plate of polished black ware was the only ceramic piece accompanying the burials. If this shallow black bowl or plate originally had a very high polish it may have functioned as a mirror. It could not be assigned to a specific burial and neither it nor the other objects found provide a phase assignmment for the burials or the structure.

The crypt itself was never filled; building debris from the collapse of the superimposed structure (the Crenelated Temple) crashed through its cover and accumulated around the burials and on the floor. The "basement" room, from which the crypt was reached, showed no signs of other usage; its floor was relatively soft and in the area cleared there were no floor features. However, because we left in place one of the toppled end walls of the Crenelated Temple, a considerable area of the floor was not cleared. Presumably, the basement itself was reached through a hatchway in the temple floor; alternatively, the temple floors may have been breached when burials were made. Collapse of the overlying structure obliterated evidence of such an opening, if indeed there was one. Inspection of the plastered inner walls of this basement vault, after they had been exposed to weathering for a year, revealed that mural paintings in black may have originally covered them, but the nature of the paintings could not be determined.

SEQUENCE OF CONSTRUCTIONAL EVENTS

Note must be taken at this point regarding problems of dates and Alta Vista chronology in general. Prior to our excavation at Alta Vista itself, we had developed a regional chronology based on a large number of radiocarbon datings and general cultural cross-dating (Kelley and Kelley 1971, Plates 1 and 2).

In this regional chonology, the Alta Vista phase, which we then believed represented the sole occupation of the site, was dated with some uncertainty at A.D. 300-500. Excavations revealed that the principal occupation of the site occurred in the Canutillo phase, during which construction

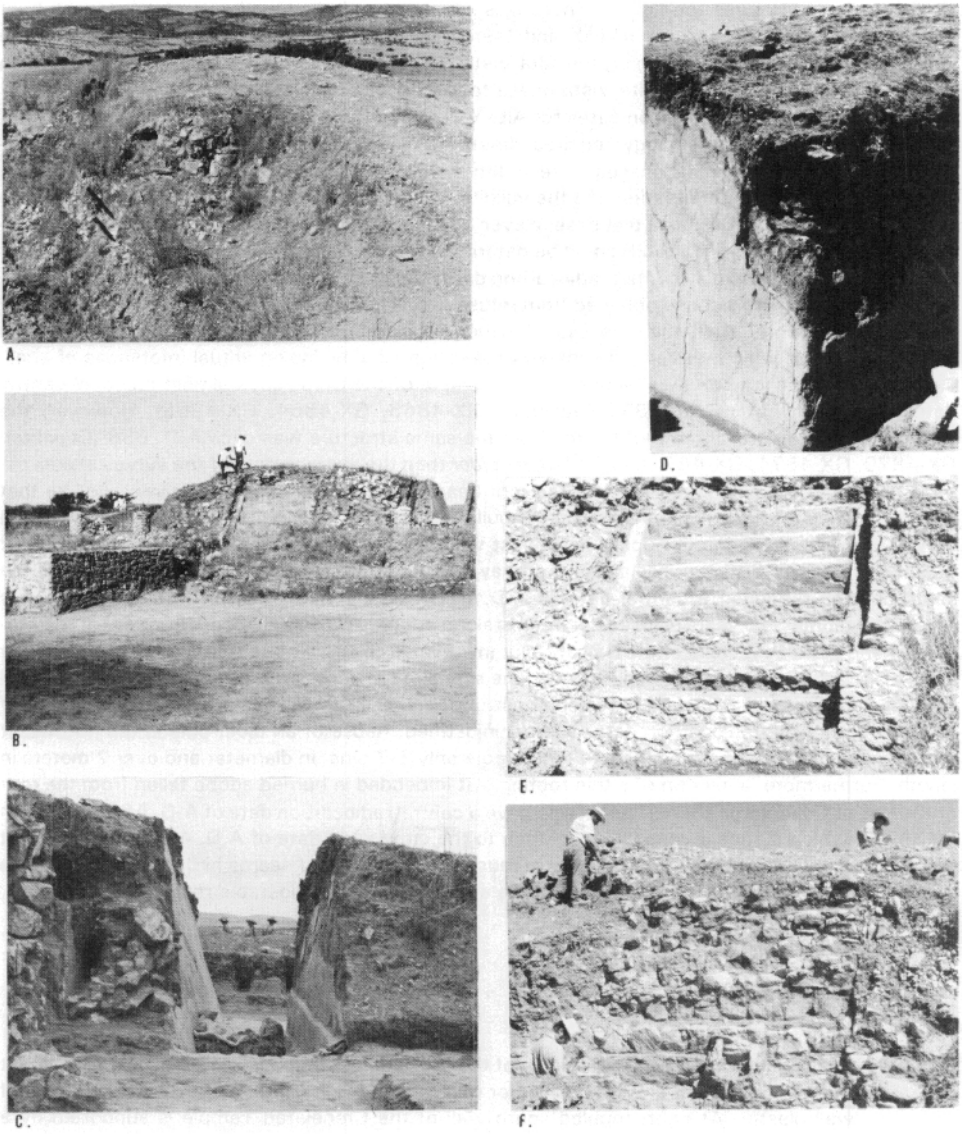

Figure 3. Photos, Alta Vista. A. View of the phramid (Structure No. 2B) before excavation, stairway at left center. B. View of pyramid from front. Court, court altar (left) and unexcavated court fill in foreground. C. View of pyramid showing final stage of construction (left), alleyway with debris of burned skull rack, and Temple of the Hearths (right) D. North corner of pyramid. E. Pyramid stair after removal of final stage. Note break between early stair rising from court and later upper stair. F. Final face of stair during excavation. Note later stone offering box constructed after stair was covered with debris.

of the nuclear structures took place. There was somewhat puzzling evidence of a following brief occupation during the Vesuvio phase, and thereafter major expansion and remodelling of the ceremonial center took place during the Alta Vista phase, followed by a brief terminal occupation during the transition from the Alta Vista phase to the Calichal phase.

When the first 14 radiocarbon dates for Alta Vista were received, it was at once apparent that this putative regional chronology required drastic revision and that use of radiocarbon determinations to date the various phases represented there would be very difficult indeed. To test the reliability of the radiocarbon dating and the validity of inferences derived from it, we submitted to the Geochron Laboratories, as a test case, eleven specimens of wood whose place in the construction sequence of Structure No. 2B could be determined with considerable reliability. The results of this test indicated conclusively that radiocarbon dates obtained from structural elements should be handled separately from those obtained from refuse deposits, often mixed and of uncertain primary origins. Furthermore, even the sole use of structural elements still required the use of certain postulates, about which we remain somewhat skeptical, in developing actual inferences of age.

Thus, three of the survey stakes from the Temple of the Crypt gave almost identical central dates, averaging out to A.D. 835 (Geochron GX-4863, GX-4864, GX-4865). However, the average central date of three roof beams from the same structure was *circa* A.D. 558 (Geochron GX-4870, GX-4871, GX-4873), or 277 years *older* than the average date of the survey stakes used in laying out the structure. Because the roof beams were quite large, it may very well be that they were reused from an unknown structure built at that time. However, in the Hall of Columns, a survey stake from the interior upper northwest wall produced a central radiocarbon date of A.D. 495 (Geochron GX-3869), while a similar survey pole from the interior upper southeast wall of the same building produced a central date of A.D. 835 (Geochron GX-3868). Taken literally, this means that some 340 years elapsed between staking out (and presumably construction) of the northwest and southeast walls of the Hall of Columns. Even if the *upper* one sigma range of the earlier date, at A.D. 620, is compared to the *lower* one sigma range of the later date, A.D. 705, there still remains an interval of 85 years between construction of the two walls; furthermore, this type of manipulation of the radiocarbon dates seems unjustified. Reuse of an older pole in the northwest wall seems unlikely; we are concerned with a pole only 5-7 cms. in diameter and over 2 meters in length. Furthermore, a section of a thin roofing slat imbedded in burned adobe fallen from the roof of the Hall of Columns on the northwest side gave a central radiocarbon date of A.D. 560 (Geochron GX3877), which stands in reasonable relation to the cited early date of A.D. 495 for staking out the wall on that side of the structure. Again reusage of older wood seems highly improbable. The dates presented hereafter accordingly must be accepted with considerable reserve.

Figure 4. The basement room of the Temple of the Crypt, beneath the later pyramid. A. Basement room with back of stairway in center rear; older step-fret figure exposed by removal of wall plaster. At right, toppled south wall of the Crenelated Temple is supported by a stone-walled base to preserve it in place. B. View of the crypt, before excavation, viewed from slightly southeast of east. Crypt roof has not been fully cleared and appears relatively intact. Actually, beams from the collapse of the Crenelated Temple broke through it. Wall at right is support for toppled wall. C. Northwest interior wall of Temple of the Crypt. The large break first occurred when collapse of overlying Crenelated Temple pulled beam end from wall. Post-abandonment erosion further expanded the break. Toppled end wall of Crenelated Temple at left. D. First burial made in crypt, loosely flexed on back. Leg bones, and other bones have been removed. Skull is *in situ* on a building block in west corner, either placed there originally (decapitation?) or at the time of the second burial. E. Bundle burials Nos. 2 (left) and 3 in west quadrant of crypt. Note building block over skull of Burial No. 1. F. West inside corner of Temple of the Crypt basement room showing shell trumpet at edge of crypt. Cavity in which corner survey pole was found rises vertically in back center.

A.

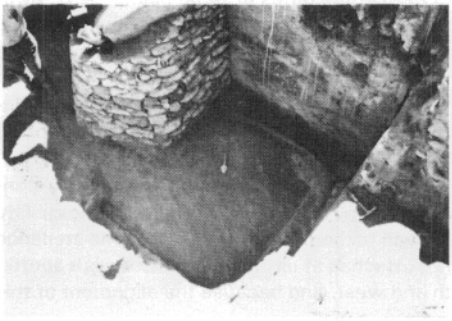

B.

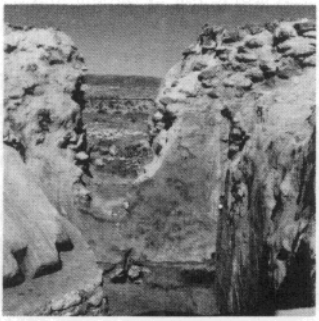

C.

D.

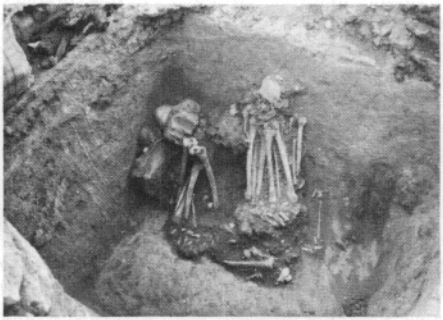

E.

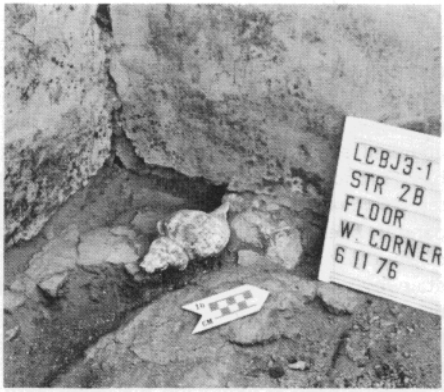

F.

The following tentative sequence of events is inferred from structural position and radiocarbon datings (uncorrected), with the reservations previously noted.

(1). Initial construction of the nuclear units of Alta Vista began between *circa* A.D. 370-610, probably well before A.D. 495 (Geochron GX-3867), the central date for the survey pole used in construction of the northwest *upper* walls of the Hall of Columns. The oldest radiocarbon date from the site is A.D. 470 (315-625), obtained from a re-used beam. Construction of the northwestern part of the Hall of Columns and the adjacent banquettes of the Southwest Court (Structure No. 2) (Figure 2) was probably completed by *circa* A.D. 560 (Geochron GX-3877), the central radiocarbon date for a slat from the burned roof overhanging the northwest upper wall of the Hall of Columns. There is possibility that only the northwestern side of the structure was constructed and roofed during this period. There is architectural evidence that construction of the Southwest Court was completed as an integral part of the construction of the Hall of Columns.

(2). At approximately the same time, an unidentified structure was built, represented by the clustered dates of roof beams in the Temple of the Crypt (central dates of three beams, A.D. 525, Geochron GX-4871; A.D. 560, Geochron GX-4870; A.D. 590, Geochron GX-4873; average A.D. 558) which we infer were reused beams from an older structure in the context where they were found.

(3). Construction of the "sarcophagus"/crypt and burial therein of the first high status individual took place at *circa* A.D. 665-680 (Geochron GX-4866, GX-4869-reused in roof 3) (average A.D. 673), or at least after A.D. 530-565 and before A.D. 795-800 (Figure 5A).

(4). The upper southeast wall of the Hall of Columns was staked out and presumably constructed at A.D. 835 (Geochron GX-3868), or between A.D. 705 and 965. There is a possibility that this was a rebuilt wall replacing an earlier one removed for some reason. Giving some credence to this suspicion is the fact that the southeast wall is not attached at either end to the walls it abutts, in contrast to apparently integral corners on the north and west, and because the alignment of this wall is slightly different from that of the opposed northwest wall.

(5). Also survey stakes were placed for the Temple of the Crypt at *circa* A.D. 835 (Geochron GX-4863, GX-4864, GX-4865), the temple was completed and burial of the second high status individual was made at *circa* A.D. 840 (Geochron GX-4876, GX-4868-reused in roof 3). The Temple of the Crypt was constructed in two parts. The lower basement area was laid out with survey stakes and thick stone masonry walls were built to enclose the "sarcophagus." The long, narrow, rectanglar enclosure thus formed was filled with earth to the level of the top of the "sarcophagus," converting it into a crypt. A thin plaster floor was placed over this fill and the walls above it received a coat of lime plaster over an adobe facing coat. The southeastern end of this basal section abutted the exterior wall of the northwest banquette of the Southwest Court and extended upward and over the banquette, enclosing the three free-standing fret figures which had apparently been built at the same time as the banquette of the northwest side of the Southwest Court of Structure No. 2, on whose outer edge they had been placed. On the southeast, the former court stairway was extended upward to the level of the top of the basal construction, complete with balustrades on each side (Figure 5B). This basal platform was covered and on it was constructed a narrow-walled temple of adobe bricks, apparently topped by merlons. The construction of this earlier Temple of the Crypt, its nature, and the type of merlons that topped its walls is inferred from the debris used in extending the basal platform for construction of the later Crenelated Temple (Figure 5C).

Other clustered dates indicate widespread remodelling and expansion of the nuclear section of Alta Vista at about the same time. The inference is that accession to power of a new priest-ruler (high status burial No. 3?) following the death of his predecessor (high status burial No. 2) resulted in widespread building activity in keeping with the Mesoamerican pattern. Note that if the dates are taken as presented, the "sarcophagus"/crypt existed as a free-standing monument for some 165 years, which seems highly improbable. Variation of the radiocarbon dates of the two events within a one sigma range, however, would bring the successive burials close enough together temporally for them to represent a single ruling lineage, which seems probable because of their sequential burial within a single crypt. This would mean that the burial of the first individual is placed much too

early or that of the second individual too late by a century or more. The burial photographs do seem to indicate that a long time elapsed between the first and second burials (Figure 4D and 4E), but that the second and third burials were made in reasonably fast succession. When the exterior of the "sarcophagus" is excavated, its appearance may provide some clues to the length of time it may have existed as a free-standing structure.

(6). A third high status burial was made within the crypt, and it appears reasonable that the superimposed Crenelated Temple was built at the same time. This Temple retained the basement and crypt of the Temple of the Crypt but was constructed with its long axis at right angles to that of its predecessor (Figure 6A). The adobe walls and merlons of the earlier structure were used as fill in extending the basal platform on which the new temple rested. As previously noted, where the adobe walls of the Crenelated Temple crossed over the basement and the crypt, they were supported on large beams set as footings in deep niches cut in the basal platform walls of the original structure. On each side of the stairway the enlarged basal platform of the new structure was extended almost to the banquette edge. We were able to find survey posts and the cast of a horizontal beam which were used to locate one of two terraces or steps with which the front of the new structure was faced. Actual facing stones have long ago disappeared but placement of remaining stones may indicate that the lower stage was markedly taluded while the upper stage was vertical (Figure 6B). We have no radiocarbon dates for the third burial or for construction of the Crenelated Temple, although datable specimens were obtained and remain in the collections stored in Zacatecas.

(7). Either the basal log supports of the Crenelated Temple broke under the superimposed weight almost immediately or after a long period of decay, or else the temple was deliberately destroyed. Whatever the cause, the front and back walls of the Crenelated Temple dropped, in part, into the basement and the crenelated end walls toppled in from both ends. The resulting debris largely filled the basement, covering the burial crypt and destroying its usefulness for subsequent burials. We have no dates for this event.

(8). The basal platform was then raised, the stairway was refaced, extending the lower step into the Southwest Court, and the platform was extended on three sides by building taluded walls, turning it into a true truncated pyramid, here termed the "Sun Pyramid" (Figure 6B). On the upper talud on the southwest, we found a formerly attached plaster and adobe sun disk. We have already noted the discovery of a sun disk mosaic with the third high status burial. One of the other mosaics apparently represents a turkey; in Huichol analogy, the turkey is the sacred bird of the sun (Furst and Scott 1975). One of the "plaster glyphs" (grafitti) discovered in the nearby Labyrinth, identified as an observatory concerned with equinox and summer solstice zenith sun observations (Kelley 1977 MS), was also that of either a turkey or an eagle. As in Huichol analogy, the corners of the Pyramid of the Sun are oriented to the cardinal points (as were those of the underlying structures) so that "Padre Sol" may climb his ladder (Furst and Scott 1975); the high status burials are grouped in the western quadrant of the crypt facing east toward the rising equinox sun, approximately in line with the axis of the Labyrinth. That the Pyramid of the Sun, as well as earlier structures buried beneath it, was concerned primarily with sun ceremonialism and that the high status individuals buried in the crypt were, in fact, sun-representatives seems strongly indicated.

Figure 5. Reconstruction of building stages of the earlier structures incorporated in the Pyramid of the Sun.

A. Architect's view of the Southwest Court banquette showing stair, stepped figures and postulated free-standing "sarcophagus".

B. Architect's view of the construction of the basal platform of the Temple of the Crypt.

C. Similar view showing postulated upper Temple of the Crypt.

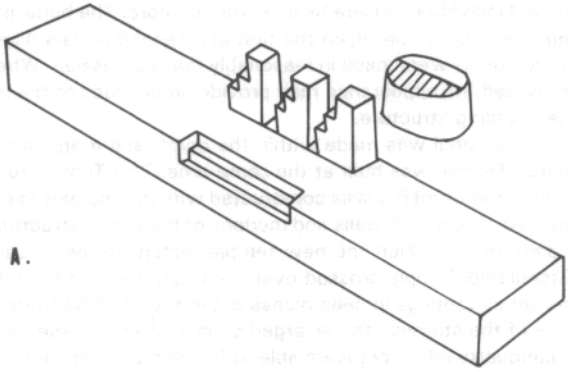

A.

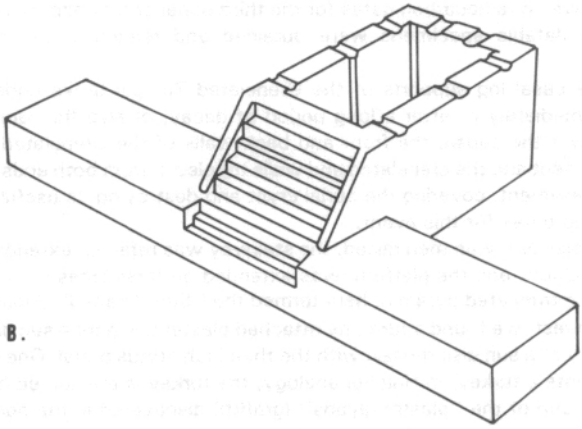

B.

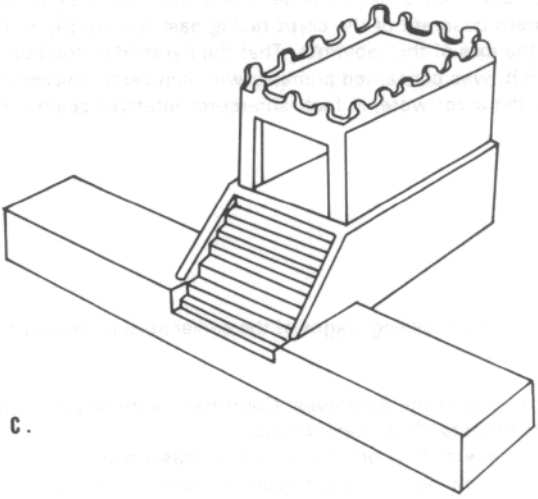

C.

(9). When the corridor lying between the Pyramid of the Sun and the adjacent temple on the northeast was excavated, the burned remains of what must have been a skull and long-bone rack was discovered. Beneath the junction of two charred beams of this frame lay a human cranium, pierced near its apex for suspension. Other pierced human crania, as well as long-bones, were discovered in the same general mass of debris and in the vicinity of the first cramium noted we recovered the proximal ends of two femurs retaining a wrapping of cord, presumably used in their suspension from the rack. In the Temple of the Skulls, the third member of the three-temple complex, situated adjacent to the Pyramid of the Sun on the southwest, evidence of another such rack was inferred from the placement of a large number of skulls and long-bones on the temple floor (Ellen Kelley 1978). In neither case could we determine whether the skull and long-bone rack was a separate structure, either vertical or horizontal, or was actually a part of the temple wall concerned. One sample of charcoal from the first skull rack noted had a radiocarbon date of A.D. 840, with a one sigma range of A.D. 705-975 (Geochron GX-3873); a second sample yielded a date of A.D. 470, between A.D. 315 and 625 (Geochron GX-3874). The latter specimen presumably was reused from an earlier construction, while the first specimen should more or less date the construction of the skull rack, although the central date of A.D. 840 seems much too early *relative to the dates of the underlying Temple of the Crypt;* a date in the tenth century would seem more acceptable in terms of the earlier dates, if indeed they are valid. Perhaps both samples represent reused timbers.

At any rate, the skull, and long-bone roof or temple wall burned and fell into the passage. Presumably the temple on the Sun Pyramid's uppermost top was destroyed and abandoned at the same time. We have no radiocarbon dates for these latter events. Perhaps at the same time, part of the putative "palace" of Structure No. 4 was destroyed by fire.

(10). After the stair of the Sun Pyramid was covered by some 20 cms. of debris, a small square stone box was built on it, apparently an offering box, although it was empty when excavated. This usage of the site as a post-occupational shrine may be correlated with a clearly post-occupational charcoal specimen recovered from the fill of the drain through the southeast platform of Structure No. 4. This specimen was radiocarbon dated at A.D. 1150, with a one sigma range of A.D. 1025-1275 (Geochron GX-3880).

CORRELATION OF BUILDING STAGES WITH CERAMIC PHASES

Correlation of ceramic phases with building stages, as outlined above, is difficult. The court floor and those of temple and platform surfaces were kept amazingly clean. The few vessel remains found in such contexts were undecorated and the wares represented occur throughout the ceramic sequence. Refuse, usually mixed with earth, stones, and other debris, was used to fill new platforms; this may have been derived from multiple sources. The basal platforms of early structures, including those of the three-temple complex, the banquettes, an attached exerior stair, the central altar of the Southwest Court, and the huge basal platform of the Hall of columns, produced only sparse decorated sherds of the Canutillo Phase, plus exotic sherds of Vista Pseudo-cloisonne and Negative A wares (Kelley and Kelley 1971, Kelley 1974, Holien 1975, 1977 MS, Holien and Pickering 1978). If one assumes that all ceramic types currently in use would have been included in the huge mass of fill represented, all of these structures would be assignable to the Canutillo phase, including the Temple of the Crypt. This, however, is a dangerous assumption; only refuse dumps of that phase may have been used as sources of fill.

We are also faced with the question of the origin of the Canutillo phase refuse found in the fill of the nuclear structures. In the field, we assumed that the ceremonial center had been constructed on the site of an earlier Canutillo phase village, whose refuse provided fill for the new construction. Yet we found no remains of earlier structures in place and only a few pieces of adobe showing marks of *jacale* walls or roofing. Furthermore, such an interpretation again confronts us with a contradiction in radiocarbon dates. Thus, as previously noted, the putative construction date for the upper northwest wall of the Hall of Columns was *circa* A.D. 495, with a one sigma range of A.D. 370-620 (Geochron GX-3869). However, the radiocarbon date of a non-constructional charcoal sample derived from the *fill* of the *basal* platform of the Hall of Columns was A.D. 670, with a one sigma range of A.D. 550-790 (Geochron GX-3867). A more likely hypothesis is that the Canutillo

phase refuse used in filling early platforms was actually the debris of a contemporary work camp. Accepting this view, the upper walls of the Hall of Columns may have actually been built before the basal platform was filled completely with debris. Obviously, more data are required to resolve this question.

Throughout much of the nuclear construction area, later pits dug into these early platforms, especially in the Hall of Columns, produced sherds of Alta Vista phase ceramic types. Certainly, constructions dating to the great remodelling of the nuclear area and general extension of the site, associated previously in this discussion with construction of the Crenelated Temple and the second high status burial in the crypt, are associated with deposits producing Alta Vista phase ceramic types. But in the platforms meeting at the southern corner of the Southwest Court, platforms containing only Canutillo phase ceramic associations have platforms producing ceramic association of both the Canutillo and Vesuvio phases superimposed upon them. On these, in turn, are superimposed structures which contain ceramics of the Alta Vista phase. Curiously enough, then, while the general sequence of phases found throughout the site is Canutillo phase followed by Alta Vista, we have an intervening Vesuvio phase occupation represented in very restricted areas. There must exist elsewhere in the site structures whose occupation produced the Vesuvio phase refuse. Presumably these represent a period of occupation falling between the Canutillo and Alta Vista phase occupations. However, we must not completely ignore the possibility that the Vesuvio phase occupation was contemporaneous with part of either the Alta Vista phase occupation or the earlier Canutillo phase occupation, like the Oaxacan *barrio* at Teotihuacan (Millon 1973: 41-42).

We have a number of radiocarbon dates from charcoal found in refuse containing sherds of these three phases. We do not know what these charcoal fragments represent nor do we know that they were originally associated with the sherds in question.

Realizing these limitations, we have the following putative radiocarbon dating of refuse of the various ceramic phases. In Canutillo phase association, we have center dates of A.D. 670 (Geochron GX-3867) from the Hall of Columns platform fill, A.D. 695 (Geochron GX-3871) from an old sealed stairway fill, and A.D. 845 (Geochron GX-3870) from the fill of the altar of the Southwest Court. Aside from the lateness of these dates, they do seem to associate fairly well with the building periods up to and including the construction of the Temple of the Crypt and the associated major period of remodelling of the nuclear area which we have otherwise attributed to the Alta Vista phase. But the one central date from deposits containing ceramics of the Vesuvio phase, demonstrably following the Cantuillo phase, is A.D. 630 (Geochron GX-3875), with a one sigma range of A.D. 500-760, which would place it early or centrally in the indicated Canutillo phase time span. And the one non-structural date clearly coming from Alta Vista phase refuse derives from Structure No. 3, just southeast of Structure No. 2. Its central date is A.D. 740 (Geochron GX-3876), its one sigma range is A.D. 585-895, placing it approximately contemporary with the Canutillo phase dates. The problem of ceramic phase dating and association of ceramic phases with building stages at Alta Vista remains unsolved.

SIGNIFICANCE OF STRUCTURES AND BURIALS DISCOVERED BENEATH THE SUN PYRAMID

The high status burials found in the Temple of the Crypt must represent, in the Mesoamerican pattern, the ceremonial interment of ruler-priest-god-representatives, probably constituting a single lineage of Alta Vista rulers and priests of the sun. The Temple of the Crypt and its successor, the Crenelated Temple, then becomes quite interesting indeed. Above was the Temple where the living priest of the sun officiated. When he died, he was buried in a crypt in the underworld (basement) below the Temple, only to be succeeded by a new representative of the sun in the Temple above. Truly, the gods disappeared through the floor of the Temple only to emerge once again as the living deity. The dead spirits remained below the Temple in the underworld; the hatchway (or possibly a temporary floor opening) served as the entrance to the spirit world, into which the god-representatives vanished and from which they emerged again.

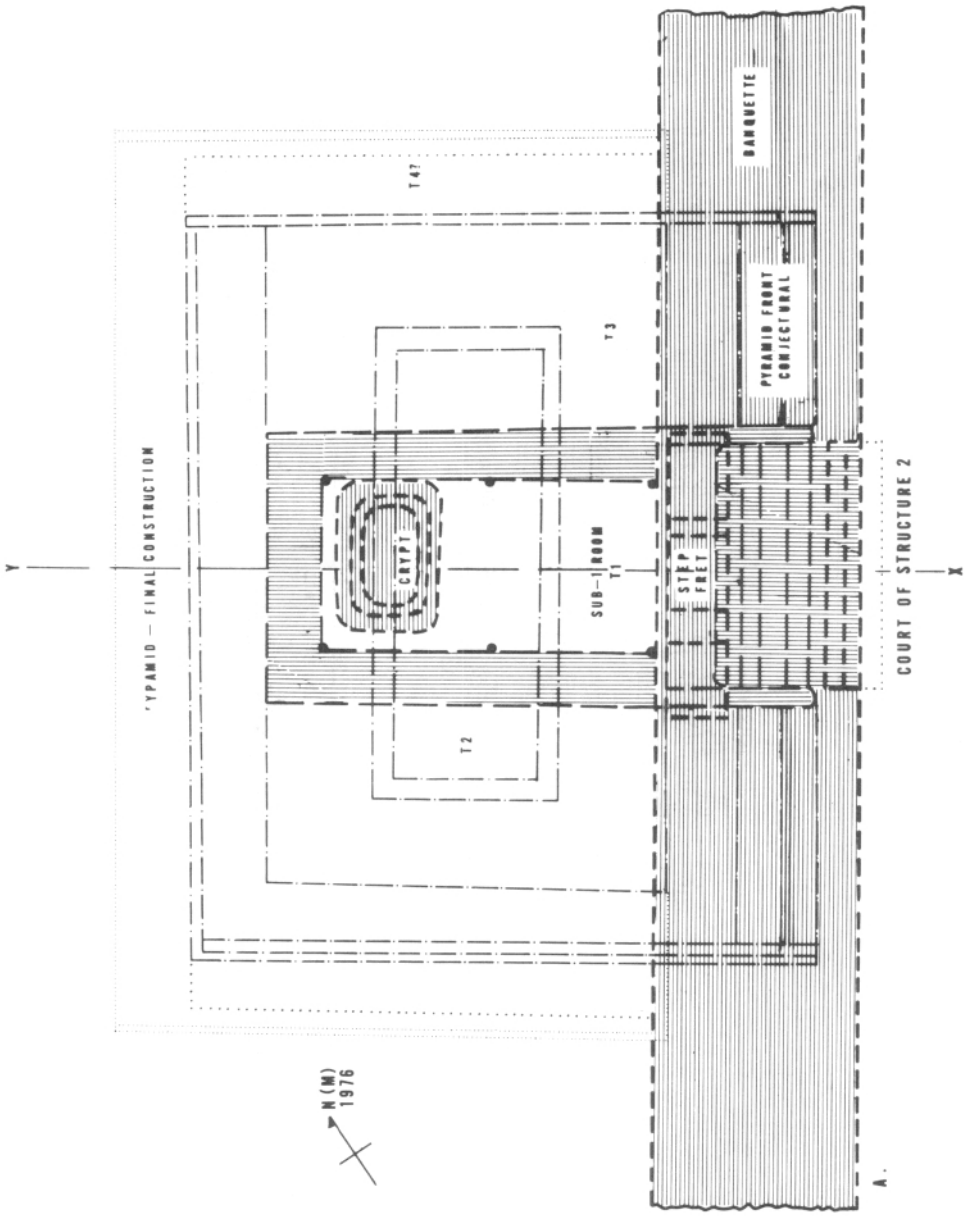

Figure 6. Plan and cross-section of Pyramid of the Sun, showing postulated construction stages. Front of pyramid is largely conjectural. For lack of sufficient data the final temple (T3) is not shown at all. A. Plan. Walls shown for interval stages are known for most part from exposures at surface and from test cuts. The Temple of the Crypt, better known, is given special emphasis in the plan. B. Cross section. The door and elevation of the Temple of the Crypt are entirely conjectural. The walls and roof of the Crenelated Temple are restored approximately from measurement of toppled walls. Fill in basement room is not shown.

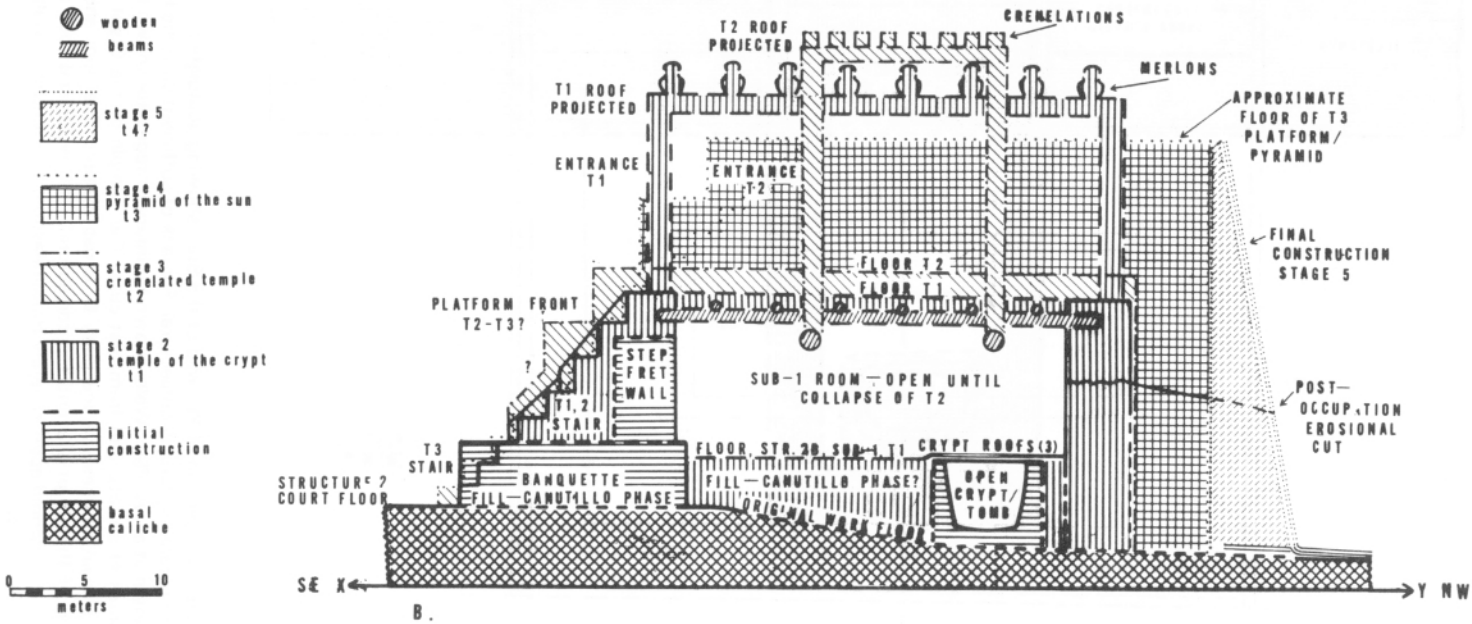
wooden
beams
stage 5
t4?
stage 4
pyramid of the sun
t3
stage 3
crenelated temple
t2
stage 2
temple of the crypt
t1
initial
construction
basal
caliche
0
5
10
meters
T2 ROOF
PROJECTED
CRENELATIONS
MERLONS
T1 ROOF
PROJECTED
APPROXIMATE
FLOOR OF T3
PLATFORM/
PYRAMID
ENTRANCE
T1
ENTRANCE
T2
FINAL
CONSTRUCTION
STAGE 5
FLOOR T2
FLOOR T1
PLATFORM FRONT
T2-T3?
?
STEP
FRET
WALL
SUB-1 ROOM — OPEN UNTIL
COLLAPSE OF T2
POST-
OCCUPATION
EROSIONAL
CUT
T1, 2
STAIR
T3
STAIR
FLOOR, STR. 2B, SUB-1 T1
CRYPT ROOFS(3)
STRUCTURE 2
COURT FLOOR
BANQUETTE
FILL—CANUTILLO PHASE
FILL—CANUTILLO PHASE?
OPEN
CRYPT/
TOMB
ORIGINAL WORK FLOOR
SE X
Y NW
B.

This conceptualization is in good Mesoamerican cultural tradition; it is also basic to Anasazi-Puebloan ceremonialism in which the sipapu in the kiva floor represents the spirit entrance to the underworld. In Huichol analogy, the effigy of the dead Fire God/Sun God occupied a cavity placed beneath or near the fireplace of the God-House (Parsons 1939:2:1012-1013); as indeed the Temple firehearth may have been the entrance to the basement and the crypt where the actual gods lay buried. Alternatively, in Huichol, a small statue of the God of Fire of the World Below is placed in a pit located in the center of the Temple of the God of Fire; the pit is covered with a circular stone disk (as is the sipapu in some Pueblo kivas) set flush with the floor. On this disk stands a statue of the God of Fire of the World Above (the sun) (Lumholtz 1973:/1902/:II:166, 169-171). The sipapu analogy is very clear.

The rectangular Temple of the Crypt with its stone masonry basal walls must certainly be regarded as analagous to the Anasazi rectangular kiva; its putative hatchway or "opening of opportunity" to the underworld as analagous to the sipapu. Clearly, basic ceremonial concepts were shared by Mesoamerican Chalchihuites and Southwestern Azasazi-Pueblo, as well as by intermediate Huichol.

But Alta Vista, the rectangular two-story Temple of the Crypt evolves into a Mesoamerican pyramid (Figures 5 and 6). If we should follow the example of some contemporary Southwestern archaeologists and consider the Chalchihuites culture as an independent universe in our research design, we might well take the position that here we have proof of the original invention, or an independent invention, of the Mesoamerican pyramid. To so conclude would be ridiculous; one must consider the Mesoamerican whole as the universe, the Chalchihuites culture on the northwestern frontier only as a cultural enclave participating to some degree in the main line of developments of Mesoamerican civilization. Indeed, the closest parallel to the Chalchihuites situation described is represented in the Teotihuacanoid structures at Kaminaljuyu near the southeastern frontier of Mesoamerica in highland Guatemala. There too, the priest-rulers, who (as at Chalchihuites, we believe) were also Teopthuacan merchants, were buried in crypts beneath the temple floor or beneath its fronting stairway complex. There also the succeeding ruler constructed a new temple beneath which he, in turn, was buried (Kidder, Jennings, and Shook 1946).

And as for central Mesoamerica itself, Richard E. W. Adams (1977:190) prefaces his section on Teotihuacan by quoting from Sahagun: "And there (Teotihuacan) all the people raised pyramids for the sun and the moon; then made many small pyramids where offerings were made . . .And when the rulers died, they buried them there. Then they built a pyramid over them . . .For so it was said; 'When we die, it is not true that we die; for still we live; we are resurrected. We still live; we awaken." (Sahagun. Book 10, 1961:191)." The Alta Vista situation could not better be described!

The Temple of the Crypt, then, is fully Mesoamerican in its broadest ceremonial and architectural aspects and developments. But it stands in relation to the grandeur and monumental aspects of Teotihuacan as does the Southwestern kiva to the Temple of the Crypt. Both share fundamental concepts in architecture and ceremonialism that diminish in complexity in ratio to their distance from the great centers. That structure which develops into a pyramid in Alta Vista is reduced to a kiva in the Anaszai; both have, conceptualy at least, their sipapus. The situation at Alta Vista once again demonstrates the magnitude of fundamental traits shared by the cultures of the American Southwest and those of Mesonamerica. Intellectually, one must regard the Southwestern cultures as minor participants in the complex and territorially extensive mighty cultural interaction sphere of Greater Mesoamerica!

REFERENCES CITED

ADAMS, Richard E. W.

1977 *Prehistoric mesoamerica.* Little, Brown and Company, Boston and Toronto.

BELL, Betty, ed.

1974 *The Archaeology of west Mexico.* Sociedad de Estudios Avanzados del Occidente de Mexico. Guadalajara.

FRISBIE, Theodore, R., ed.
1975 *Collected papers in honor of Florence Hawley Ellis. Archaeological Society of New Mexico, Paper No. 2.* Hooper Publishing Company, Norman.

FURST, Peter T. and Stuart D. SCOTT
1975 La Escalera del Padre Sol: Un Paralelo Etnografico-Arqueologico desde el Occidente de Mexico. Boletin, Epoca II, pp. 132-20. Instituto Nacional de Antropologia e Historia, Mexico.

HOLIEN, Thomas
1975 Pseudo-Cloisonne in the Puebloan Southwest. *Collected papers in honor of Florence Hawley Ellis.* Theodore R. Frisbie, ed. *Archaeological Society of New Mexico, Paper No. 2,* pp. 157-177. Hooper Publishing Company, Norman.
1977 Mesoamerican Pseudo-Cloisonne and Other Decorative Inventments. Unpublished Ph.D. dissertation. Southern Illinois University, Carbondale.

HOLIEN, Thomas and Robert B. PICKERING
1978 Analogues in Classic Period Chalchihuites Culture to Late Mesoamerican Ceremonialism. *Middle classic mesoamerica, A.D. 400-700.* Esther Pasztory, ed. pp. 145-157. Columbia University Press, New York.

KELLEY, Ellen Abbott
1978 The Temple of the Skulls at Alta Vista, Chalchihuites. *Across the Chichimec Sea: Papers in honor of J. Charles Kelley.* Carroll L. Riley and Basil C. Hedrick, eds. pp. 102-126. Southern Illinois University Press, Carbondale.

KELLEY, J. Charles
1966 Sipapu and Plaza Too. Paper presented at 31st annual meeting of the Society for American Archaeology, Reno.
1971 Archaeology of the Northern Frontier: Zacatecas and Durango. *Handbook of middle American Indians.* Robert Wauchope, gen. ed.. Volume 11: *Archaeology of northern mesoamerica,* Part 2, pp. 768-802. University of Texas Press, Austin.
1974 Speculations on the Culture History of Northwestern Mesoamerica. *The Archaeology of west Mexico.* Betty Bell, ed. pp. 19-39. Sociedad de Estudios Avanzados del Occidente de Mexico, A.C., Guadalajara.
1976 Alta Vista: Outpost of Mesoamerican Empire on the Tropic of Cancer. *Las fronteras de mesoamerica, XIV mesa redonda,* Tegucigalpa, pp. 21-40. Sociedad Mexicana de Antropologia, Mexico.
1977 Alta Vista, A Possible Astronomical Observatory on the Tropic of Cancer. Paper delivered at the 76th annual meeting of the American Anthropological Association, Houston.

KELLEY, J. Charles and Ellen Abbott (KELLEY)
1966 The Cultural Sequence on the North Central Frontier of Mesoamerica, XXXVI Congreso internacional de americanistas, Espana, 1964. *Actas y memorias,* Vol. 1, pp. 325-344. Sevilla.
1971 An Introduction to the Ceramics of the Chalchihuites Culture of Zacatecas and Durango, Mexico. Part I: The Decorated Wares. *Mesoamerican studies,* No. 5, *Research records of the University Museum.* Southern Illinois University, Carbondale.
1978 The Rise and Fall of the Classic as seen from the Northwestern Frontier of Mesoamerica. *The rise and fall of the central Mexican classic.* Joseph Mountjoy and Donald Brockington, editors. Universidad Autonoma de Mexico, Mexico.

KIDDER, Alfred V., Jesse D. JENNINGS, and Edwin M. SHOOK
1946 Excavations at Kaminaljuyu, Guatemala. Carnegie Institution of Washington, publication 561. Carnegie Institution of Washington, Washington.

LUMHOLTZ, Carl
1973 Unknown Mexico. Volume 2. The Rio Grande Press, Inc. Glorietta Original publication, 1902.

MILLON, Rene

1973 *The Teotihuacan map. Vol. 1, part one: text. Urbanization at Teotihuacan, Mexico.* Rene Millon, ed. University of Texas Press, Austin and London.

PARSONS, Elsie Clews

1939 *Pueblo Indian religion.* 2 vols. The University of Chicago Press, Chicago.

PASZTORY, Esther, ed.

1978 *Middle classic mesoamerica, A.D. 400-700.* Columbia University Press, New York.

RILEY, Carroll L. and Basil C. HEDRICK, eds.

1978 *Across the Chichimec Sea: Papers in honor of J. Charles Kelley.* Southern Illinois University Press, Carbondale.

SAHAGUN, Fray Bernadino de

1961 Florentine Codex: General History of the Things of New Spain. Book 10: The People. Trans. by Charles E. Dibble and Arthur J. O. Anderson. *Monographs of the school of American research and the museum of New Mexico,* No. 14, Part XI. The School of American Research and The University of Utah, Sante Fe.